CAD FILE:

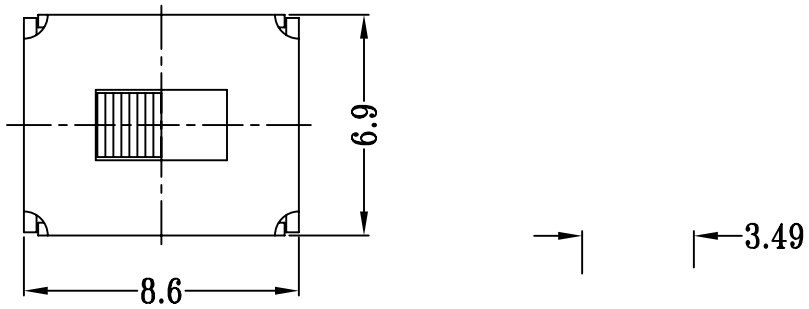

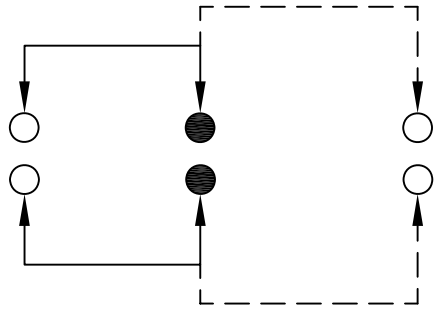

SCHEMATIC (SHORTING)

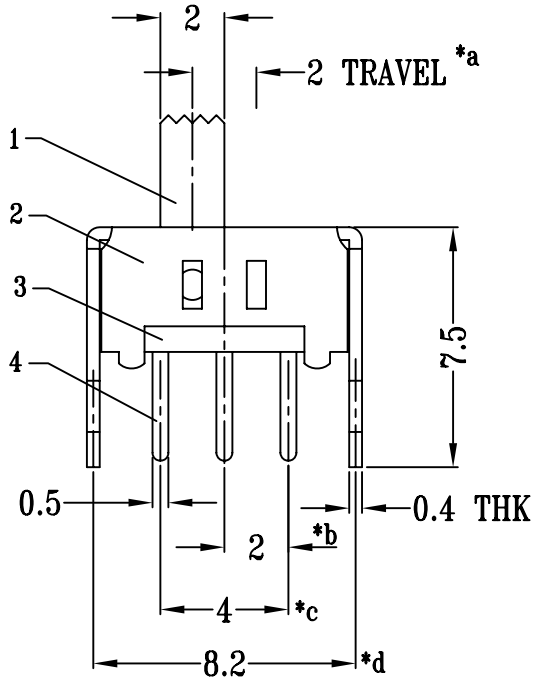

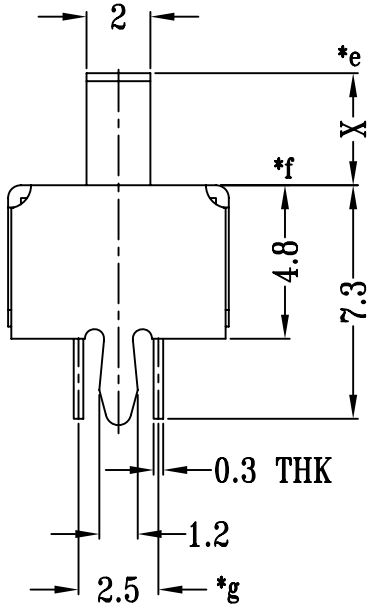

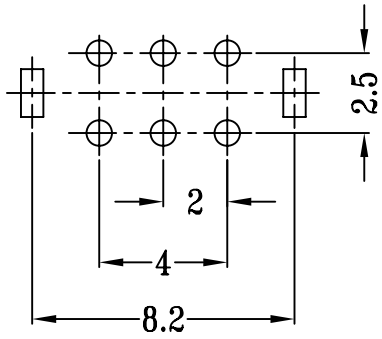

P.C.B LAYOUT

注:带"*"表示关键尺寸(7个)

NO.	PARTS	MATERIALS	Q'TY	FINISH
8				
7				
6	SPRING PLATE	STAINLESS STEEL	2	NATURAL
5	CONTACT CLIP	PBS	2	Ag CLAD
4	TERMINAL	BRASS STRIP	6	Ag PLATED OVER Ni PLATED
3	BASE	PHENOLIC RESIN	1	NATURAL
2	FRAME	STEEL STRIP	1	Ni PLATED
1	KNOB	POM	1	BLACK

TOLERANCE UNLESS SPECIFIED
WITHIN: 1.5±0.1mm
OVER : 1.5±0.2mm

SHENZHEN XIEJIA ELECTRONICS CO.,LTD.

ISSUE	DATE	DESCRIPTIONS OF REVISION	APPD.

TITLE : VERTICAL SLIDE SWITCH

UNIT : mm

DRWG NO.: XJ-DR-SS22D13-00

MODEL: SS-22D13

SCALE: 4:1

DWN.	ZHOUYU	2004-7-11
CHK'D	FANGYING	2004-7-11
APPD.	KANGXINAN	2004-7-11

ALL MATERIALS MUST BE COMPLIANT TO ROHS